Railway Track and Signalling

ARTC
Hunter Valley Lease

Section: Goulburn Valley (Ulan)

Go to page 2 for index

Last revised
30 Dec 2025

Diagrams: 582

GOULBURN VALLEY (ULAN) TRACK & SIGNAL INDEX

Page	Drawing	Section
1	Cover	*Goulburn River*
2		Index
3	Sect. O3	*Goulburn River*
4	N519	Muswellbrook
5	N570	Bengalla
6	N571	Mt Pleasant
7	N572	Mangoola - Denman
8	N573	Yarrawa - Sandy Hollow
9	N574	Baerami - Kerrabee
10	N575	Cox's Gap - Bylong
11	N576	Coggan Creek
12	N577	Wolar - Wilpinjong
13	N578	Moolarben - Ulan
		Merrygoen Link
14	N581	Gulgong - Gulgong North
15	N582	Birrawa - Dunedoo

Page	Drawing	Section

LINE	Ulan
SECTION	Muswellbrook - Merrygoen
PAGES	570 - 582

New South Wales

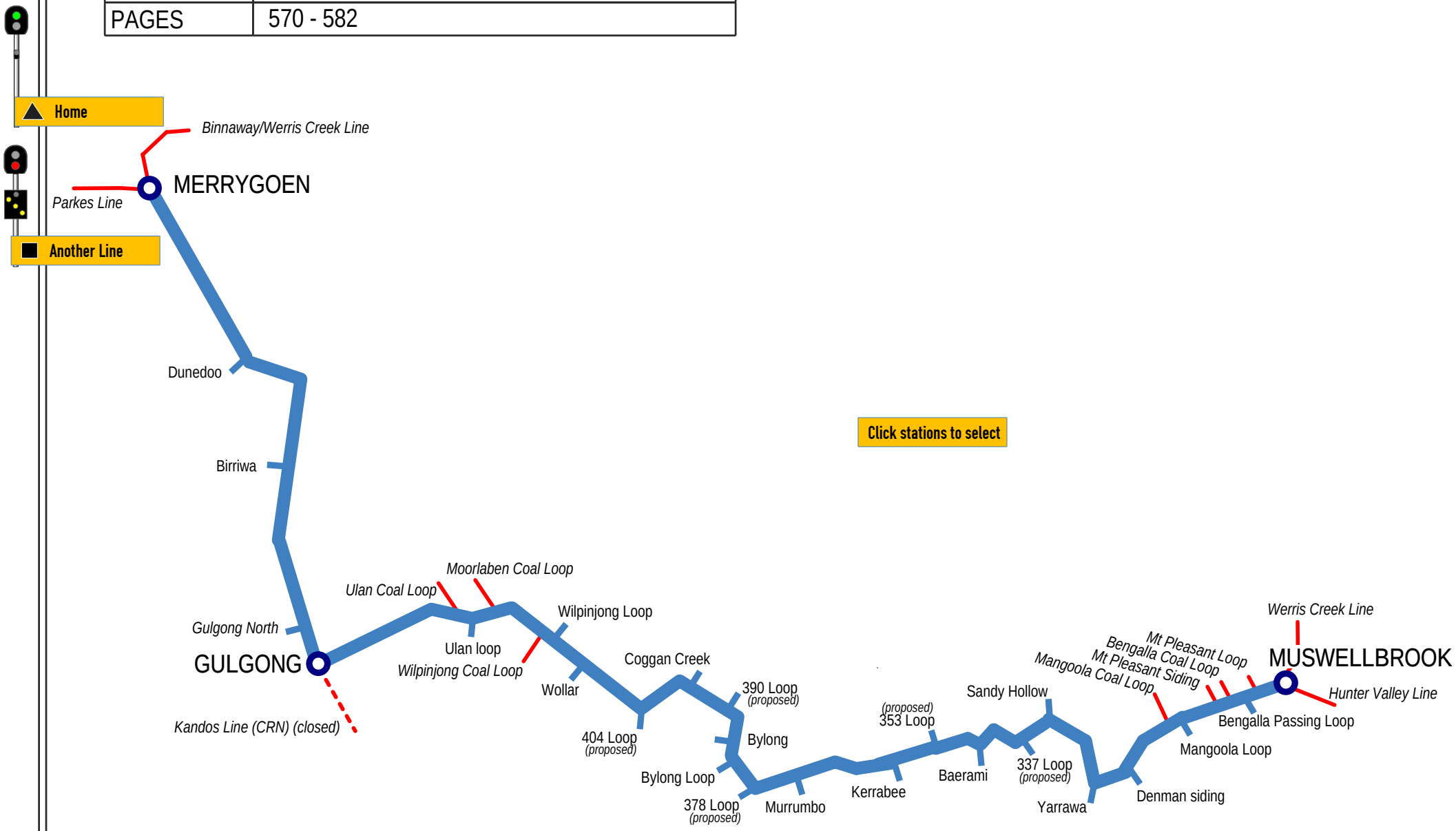

Section O3

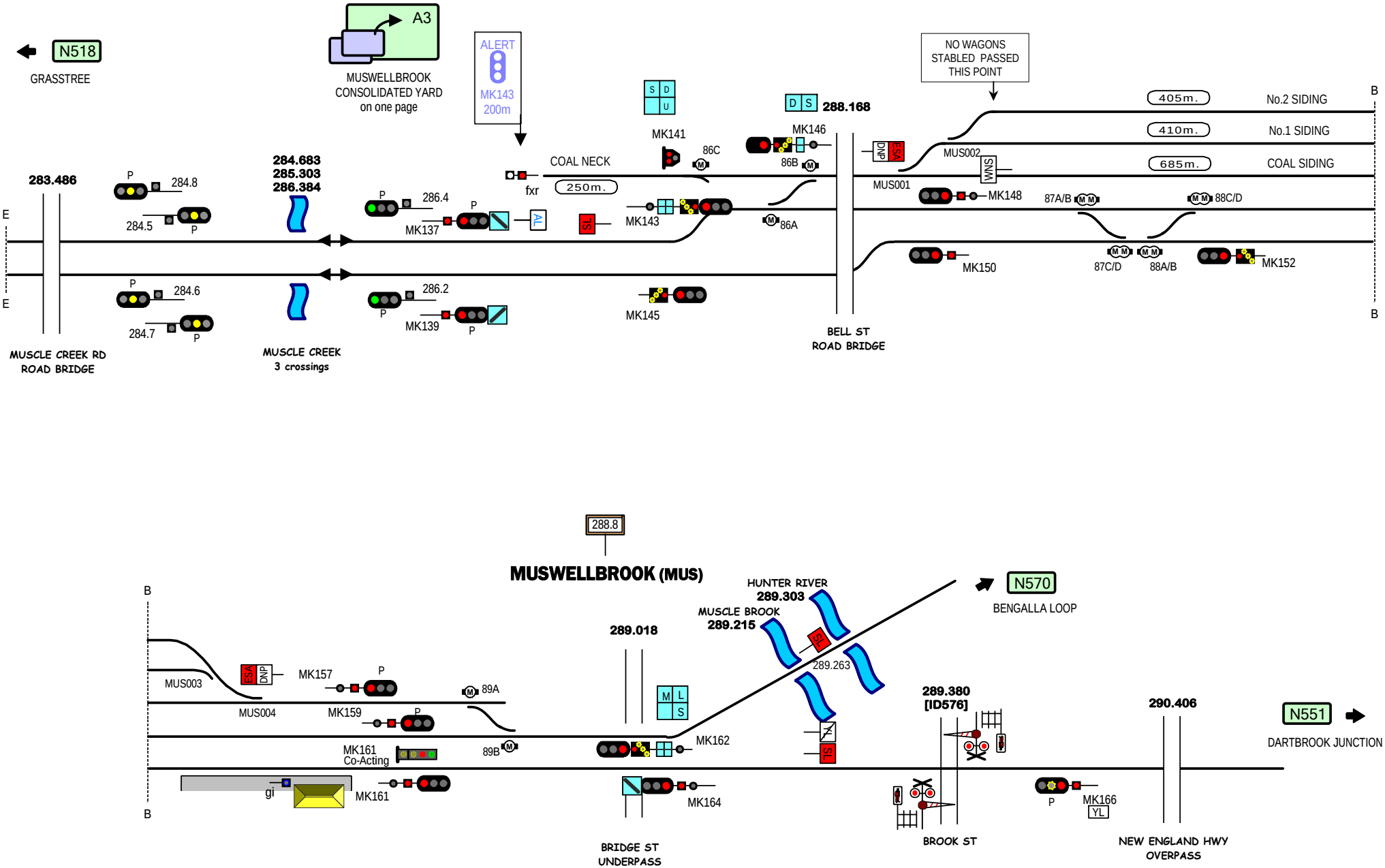

Signal Locations

Home | Support

© 2008 G F Vincent

STANDARD GAUGE TRACK

MUSWELLBROOK

N519

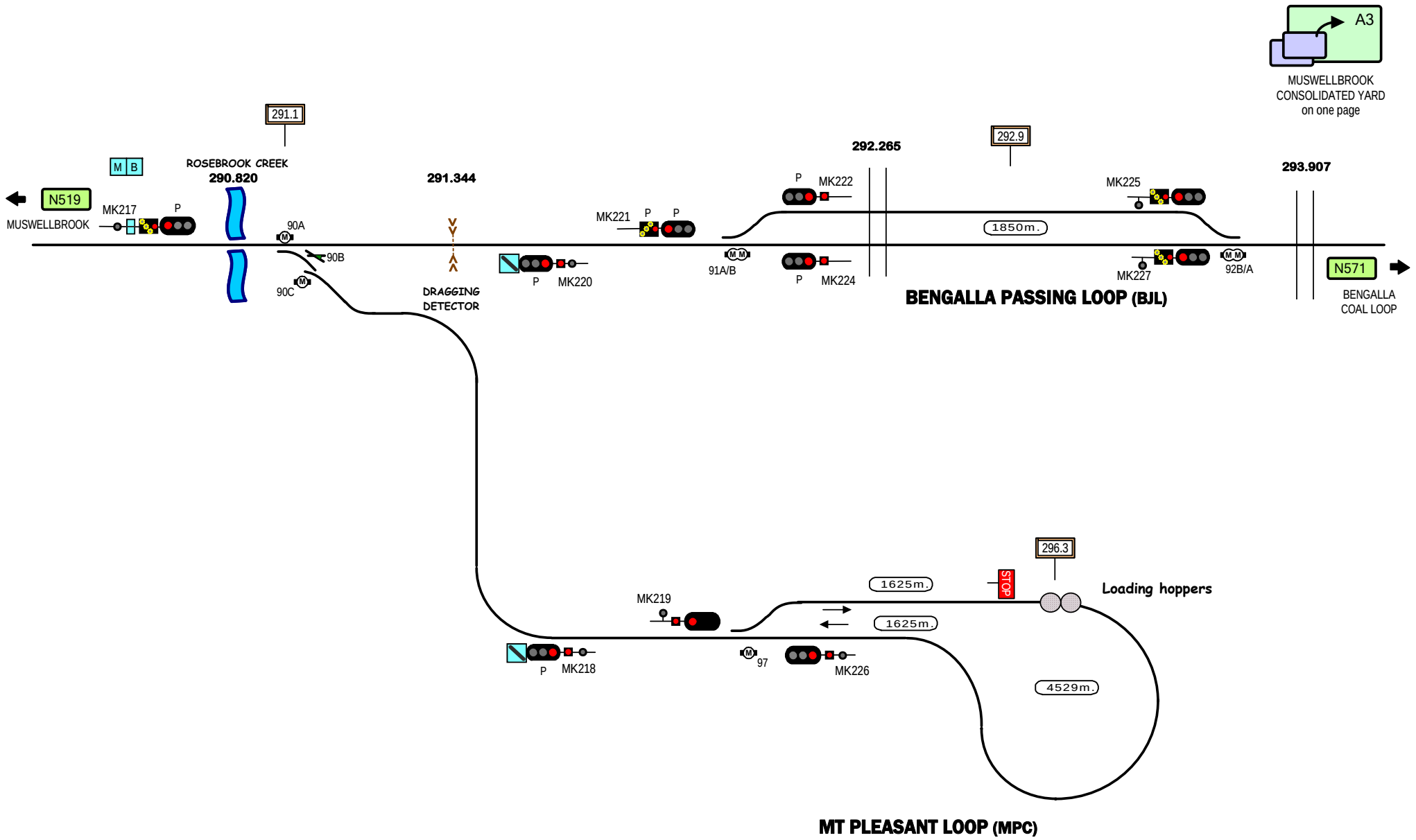

STANDARD GAUGE TRACK

MT PLEASANT LOOP - BENGALLA LOOP

Signal Locations

Home | Support

© 2021 G F Vincent

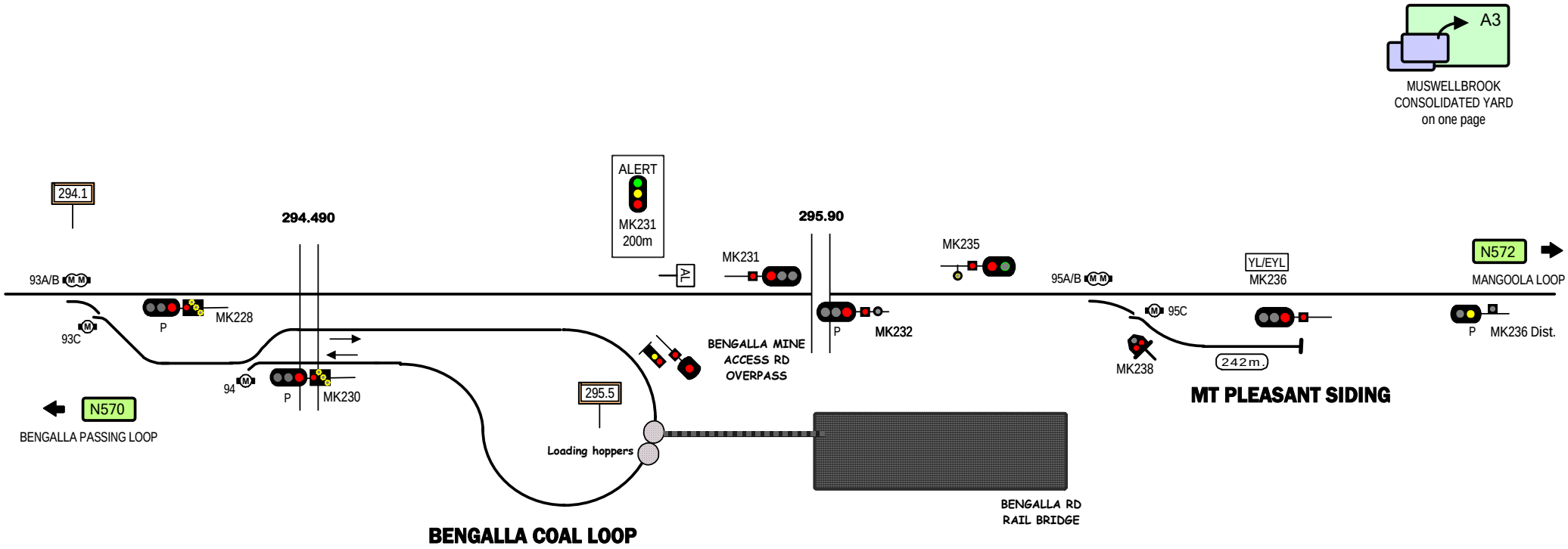

STANDARD GAUGE TRACK

BENGALLA - MT PLEASANT SIDING

Signal Locations
Home
Support

© 2007 G F Vincent

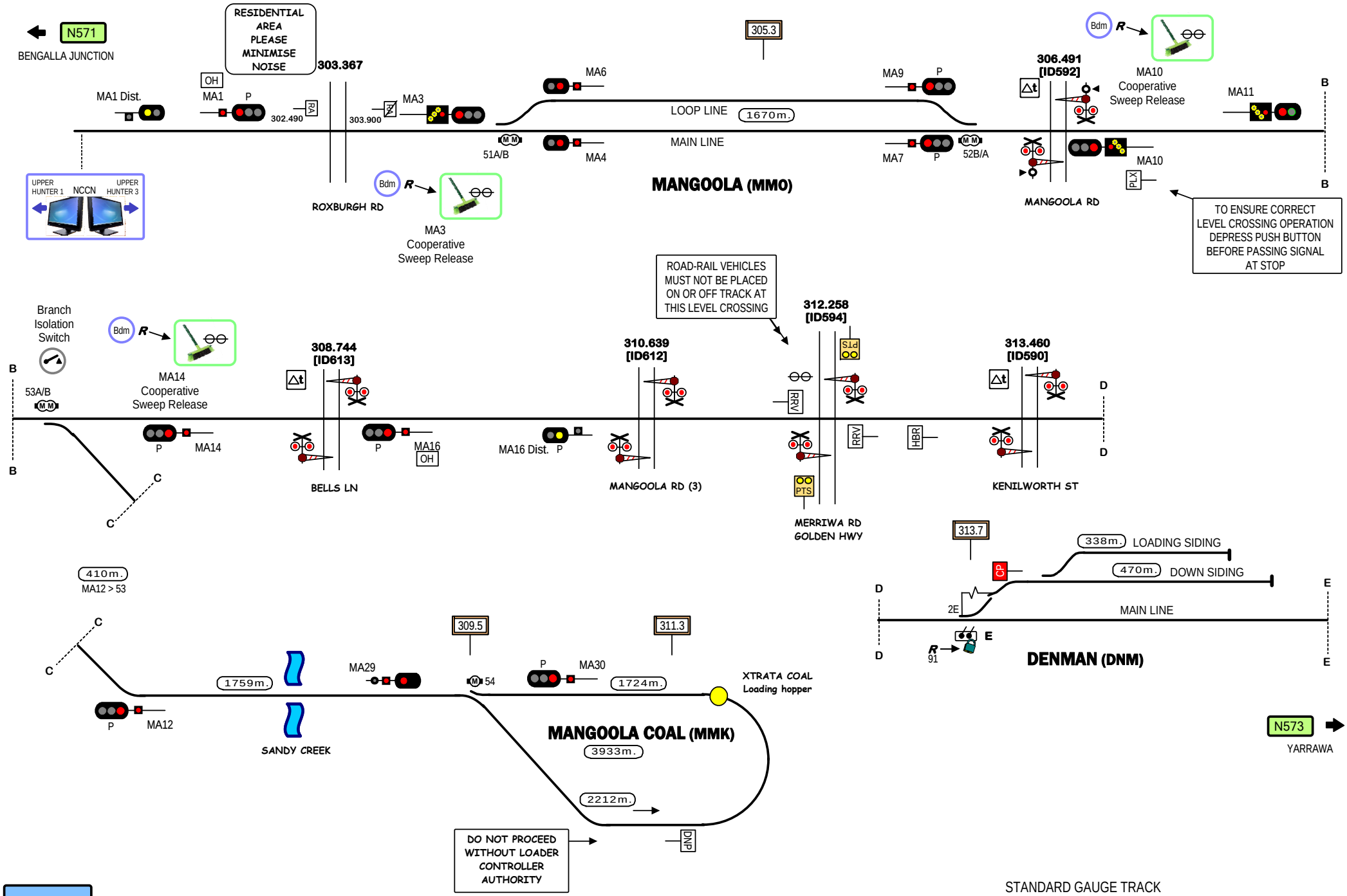
N571
BENGALLA JUNCTION
RESIDENTIAL AREA PLEASE MINIMISE NOISE
303.367
OH
MA1
MA1 Dist.
P
302.490
RA
303.900
MA3
305.3
MA6
MA9
P
306.491
[ID592]
Bdm
R
MA10
Cooperative Sweep Release
MA11
LOOP LINE
1670m.
MAIN LINE
51A/B
MA4
MA7
52B/A
MA10
PLX
MANGOOLA (MM0)
MANGOOLA RD
UPPER HUNTER 1
NCCN
UPPER HUNTER 3
ROXBURGH RD
MA3
Cooperative Sweep Release
TO ENSURE CORRECT LEVEL CROSSING OPERATION DEPRESS PUSH BUTTON BEFORE PASSING SIGNAL AT STOP
ROAD-RAIL VEHICLES MUST NOT BE PLACED ON OR OFF TRACK AT THIS LEVEL CROSSING
Branch Isolation Switch
53A/B
MA14
Cooperative Sweep Release
308.744
[ID613]
310.639
[ID612]
312.258
[ID594]
313.460
[ID590]
PTS
RRV
HBR
MA14
MA16
OH
MA16 Dist.
BELLS LN
MANGOOLA RD (3)
MERRIWA RD
GOLDEN HWY
KENILWORTH ST
313.7
338m.
LOADING SIDING
470m.
DOWN SIDING
CP
2E
MAIN LINE
91
DENMAN (DNM)
410m.
MA12 > 53
309.5
311.3
1759m.
MA29
54
MA30
1724m.
XTRATA COAL
Loading hopper
MA12
SANDY CREEK
MANGOOLA COAL (MMK)
3933m.
2212m.
DNP
DO NOT PROCEED WITHOUT LOADER CONTROLLER AUTHORITY
N573
YARRAWA
Signal Locations
Home
Support
© 2007 G F Vincent
STANDARD GAUGE TRACK
MANGOOLA - DENMAN
N572

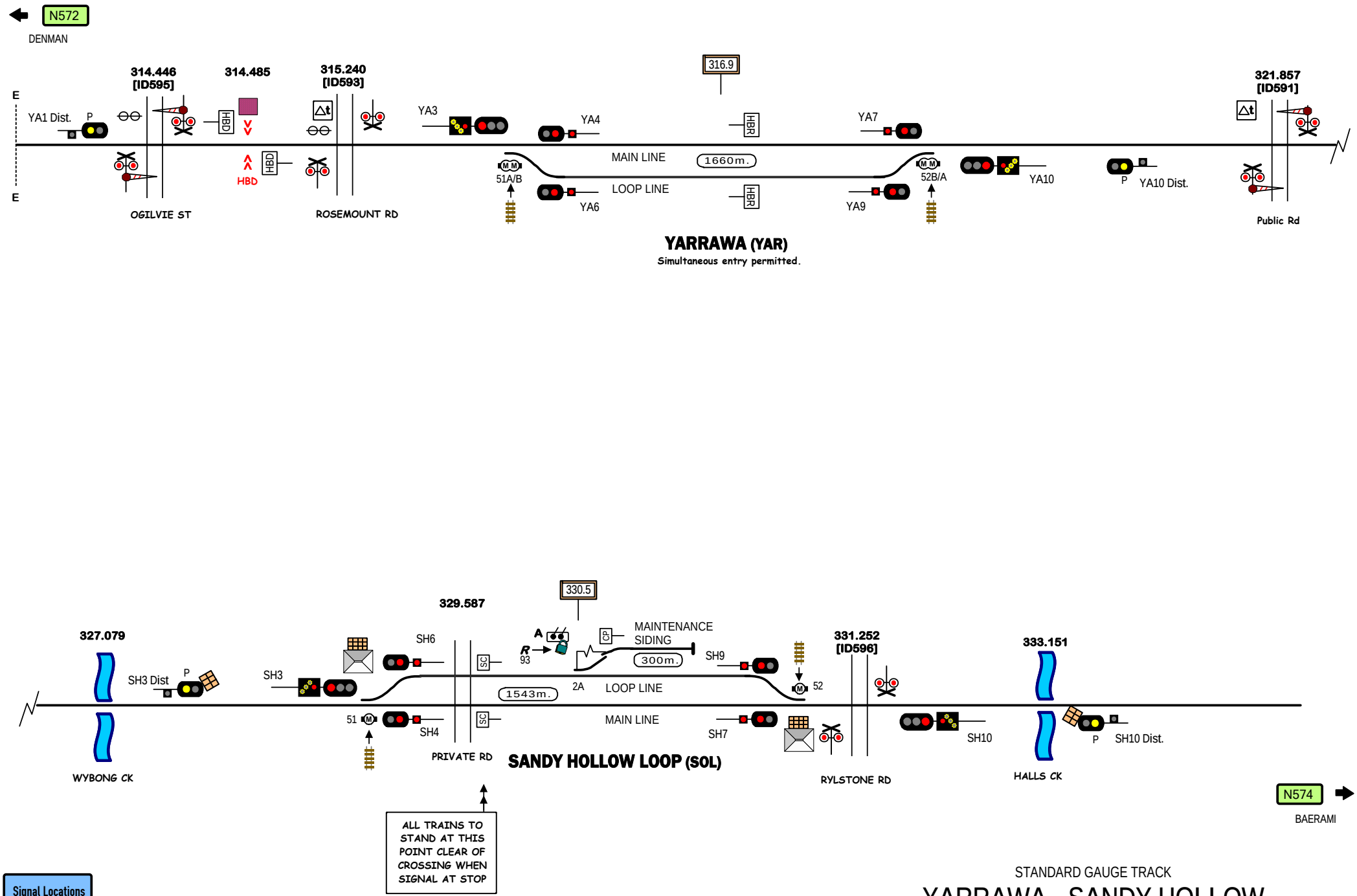

Signal Locations

Home | Support

© 2007 G F Vincent

STANDARD GAUGE TRACK

YARRAWA - SANDY HOLLOW

N573

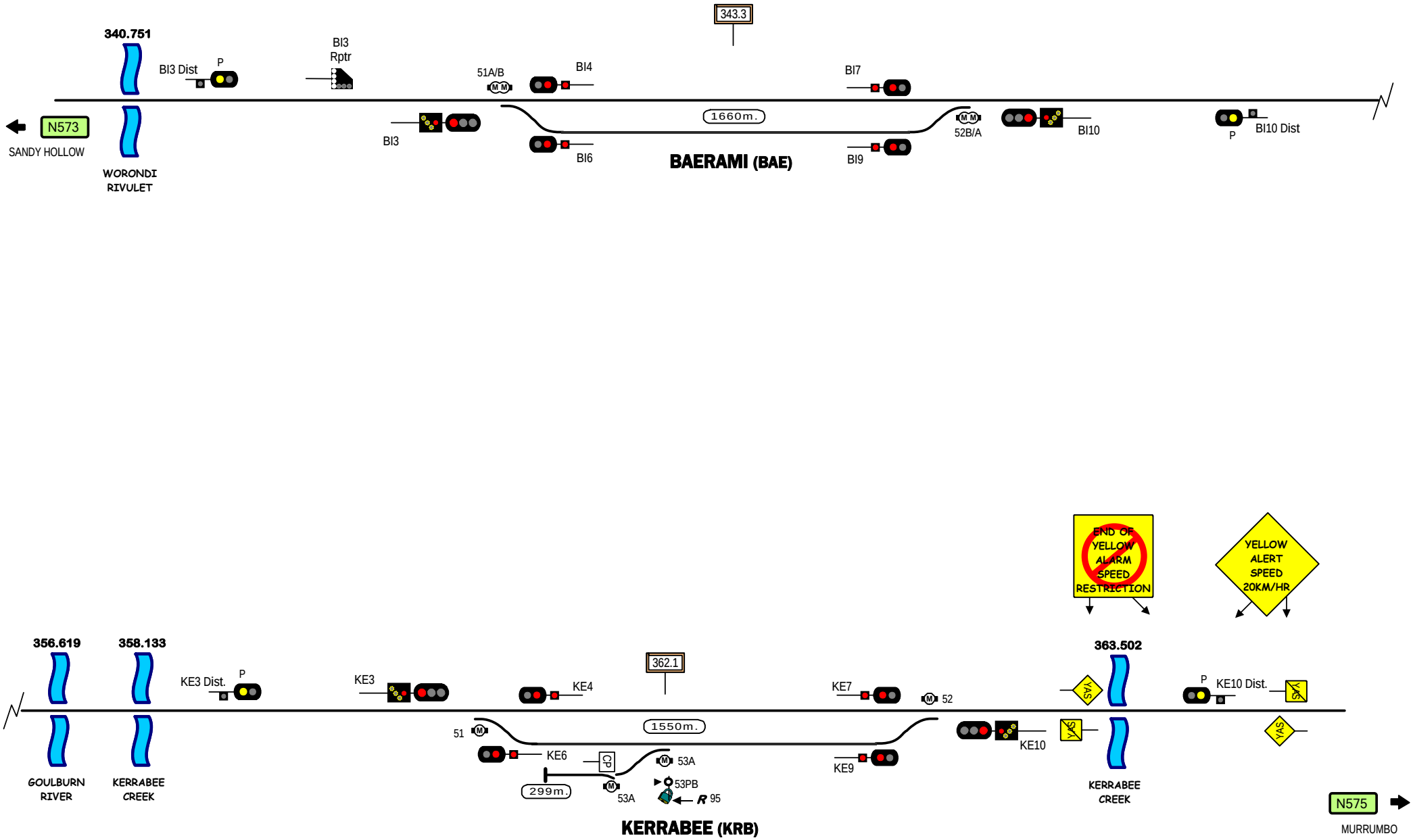

Signal Locations

Home | Support

© 2007 G F Vincent

STANDARD GAUGE TRACK

BAERAMI - KERRABEE

N574

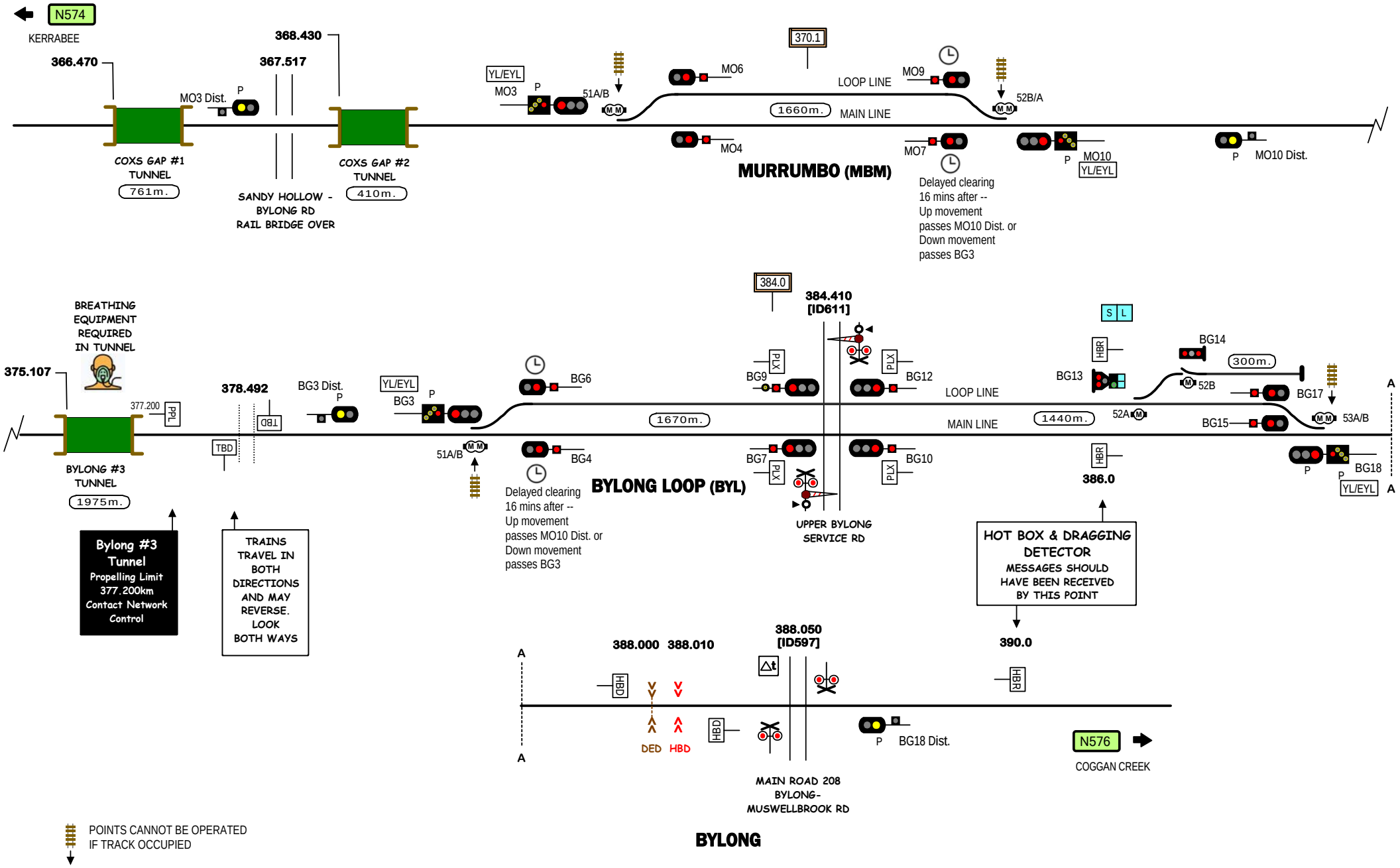

STANDARD GAUGE TRACK

COXS GAP - BYLONG

N575

Signal Locations
Home
Support

© 2007 G F Vincent

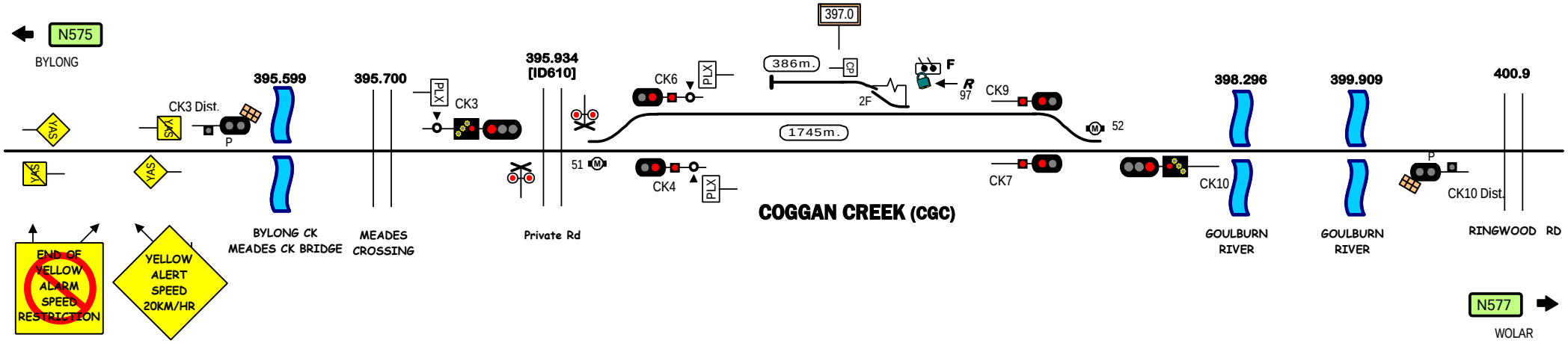

Signal Locations
Home
Support

© 2011 G F Vincent

STANDARD GAUGE TRACK

COGGAN CREEK

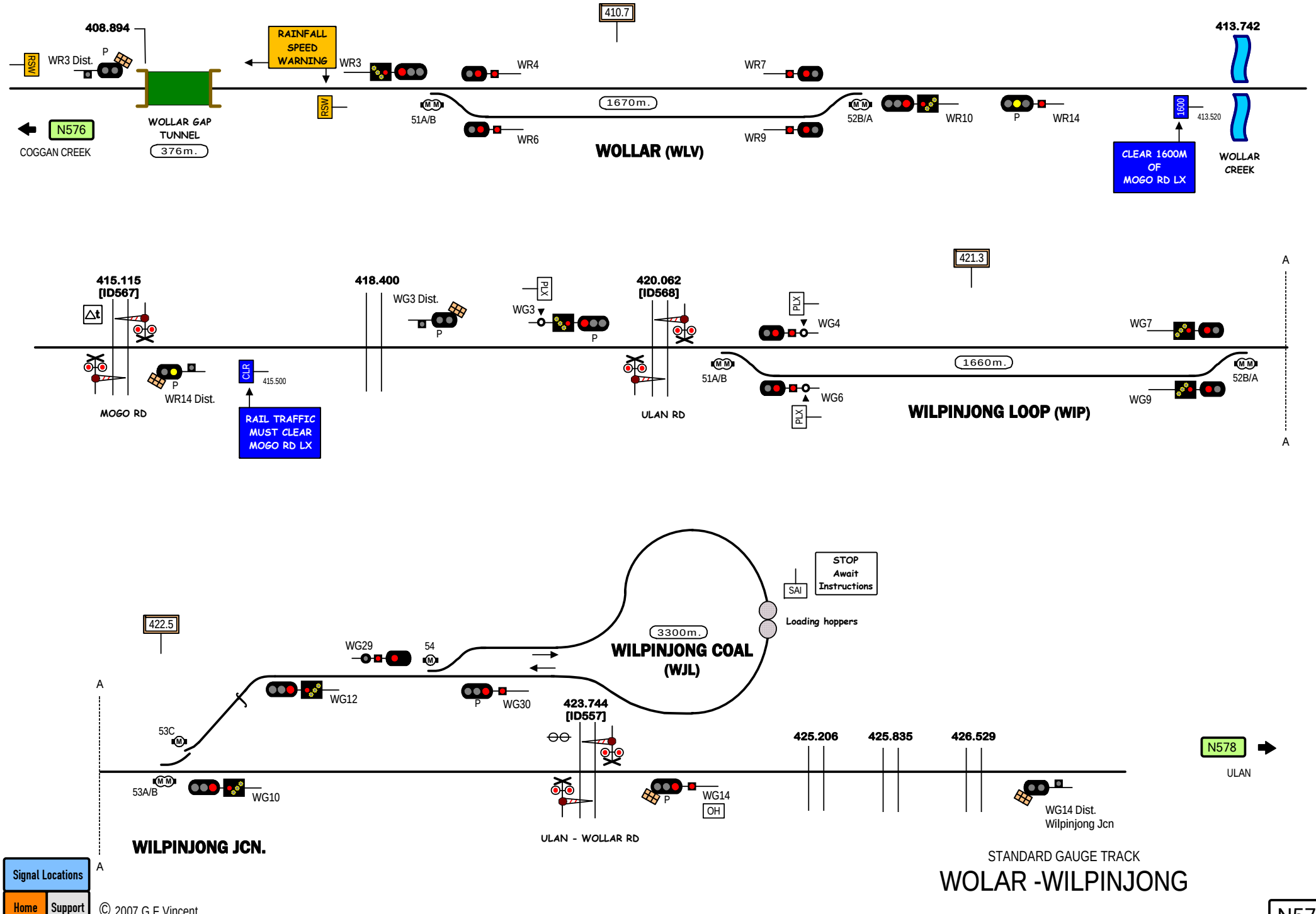
408.894
RSW
WR3 Dist.
P
WOLLAR GAP TUNNEL
376m.
N576
COGGAN CREEK
RAINFALL SPEED WARNING
WR3
RSW
410.7
WR4
51A/B
WR6
1670m.
WOLLAR (WLV)
WR7
WR9
52B/A
WR10
P
WR14
413.742
1600
413.520
CLEAR 1600M OF MOGO RD LX
WOLLAR CREEK
415.115
[ID567]
△t
MOGO RD
P
WR14 Dist.
CLR
415.500
RAIL TRAFFIC MUST CLEAR MOGO RD LX
418.400
WG3 Dist.
P
PLX
WG3
P
420.062
[ID568]
ULAN RD
421.3
PLX
WG4
51A/B
WG6
PLX
1660m.
WILPINJONG LOOP (WIP)
WG7
WG9
52B/A
A
A
422.5
WG29
54
WG12
P
WG30
3300m.
WILPINJONG COAL (WJL)
SAI
STOP Await Instructions
Loading hoppers
423.744
[ID557]
53C
53A/B
WG10
WILPINJONG JCN.
P
WG14
OH
ULAN - WOLLAR RD
425.206
425.835
426.529
WG14 Dist.
Wilpinjong Jcn
N578
ULAN
A
A
Signal Locations
Home
Support
© 2007 G F Vincent
STANDARD GAUGE TRACK
WOLAR -WILPINJONG
N577

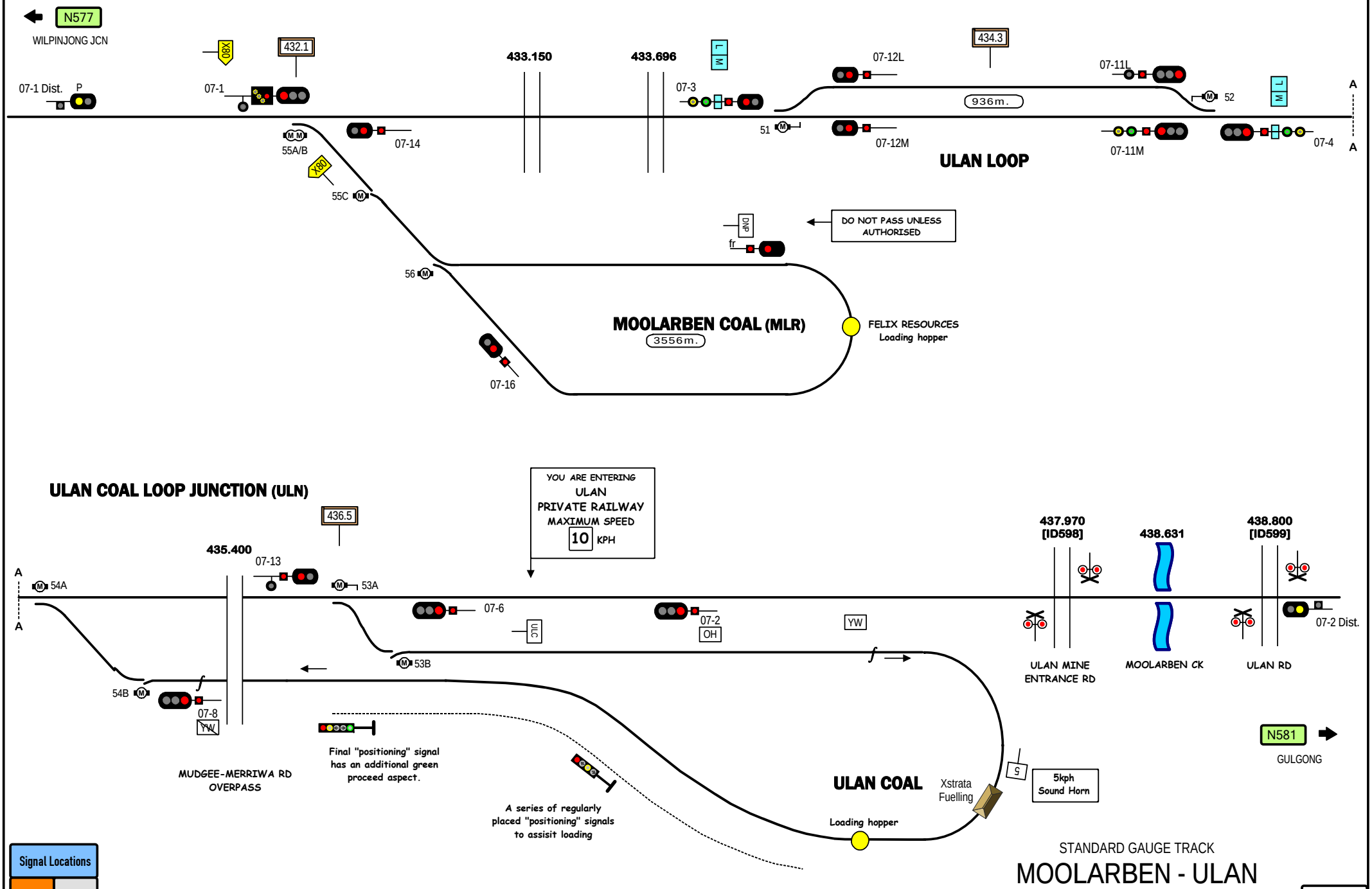
N577
WILPINJONG JCN
X80
432.1
07-1 Dist.
P
07-1
433.150
433.696
L
M
07-3
07-12L
434.3
936m.
07-11L
52
51
07-12M
07-11M
07-4
A
A
55A/B
07-14
X80
55C
ULAN LOOP
DND
fr
DO NOT PASS UNLESS AUTHORISED
56
MOOLARBEN COAL (MLR)
3556m.
FELIX RESOURCES
Loading hopper
07-16
ULAN COAL LOOP JUNCTION (ULN)
436.5
435.400
07-13
YOU ARE ENTERING
ULAN
PRIVATE RAILWAY
MAXIMUM SPEED
10 KPH
437.970
[ID598]
438.631
438.800
[ID599]
54A
53A
07-6
ULC
07-2
OH
YW
07-2 Dist.
53B
54B
07-8
YW
ULAN MINE
ENTRANCE RD
MOOLARBEN CK
ULAN RD
MUDGEE-MERRIWA RD
OVERPASS
Final "positioning" signal
has an additional green
proceed aspect.
A series of regularly
placed "positioning" signals
to assisit loading
ULAN COAL
Loading hopper
Xstrata
Fuelling
5
5kph
Sound Horn
N581
GULGONG
STANDARD GAUGE TRACK
MOOLARBEN - ULAN
N578
Signal Locations
Home
Support
© 2007 G F Vincent

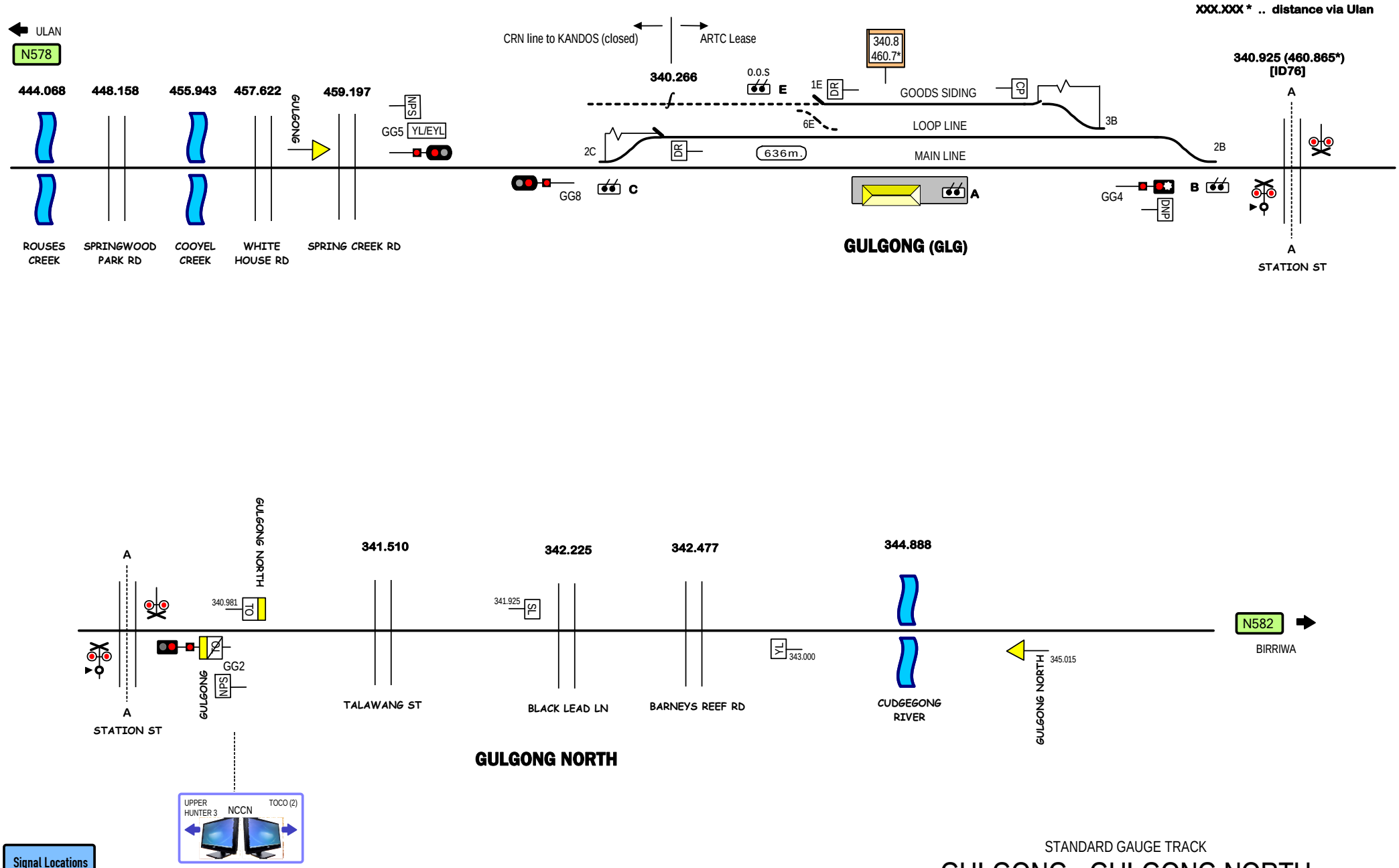

Signal Locations

Home | Support

© 2007 G F Vincent

STANDARD GAUGE TRACK

GULGONG - GULGONG NORTH

N581

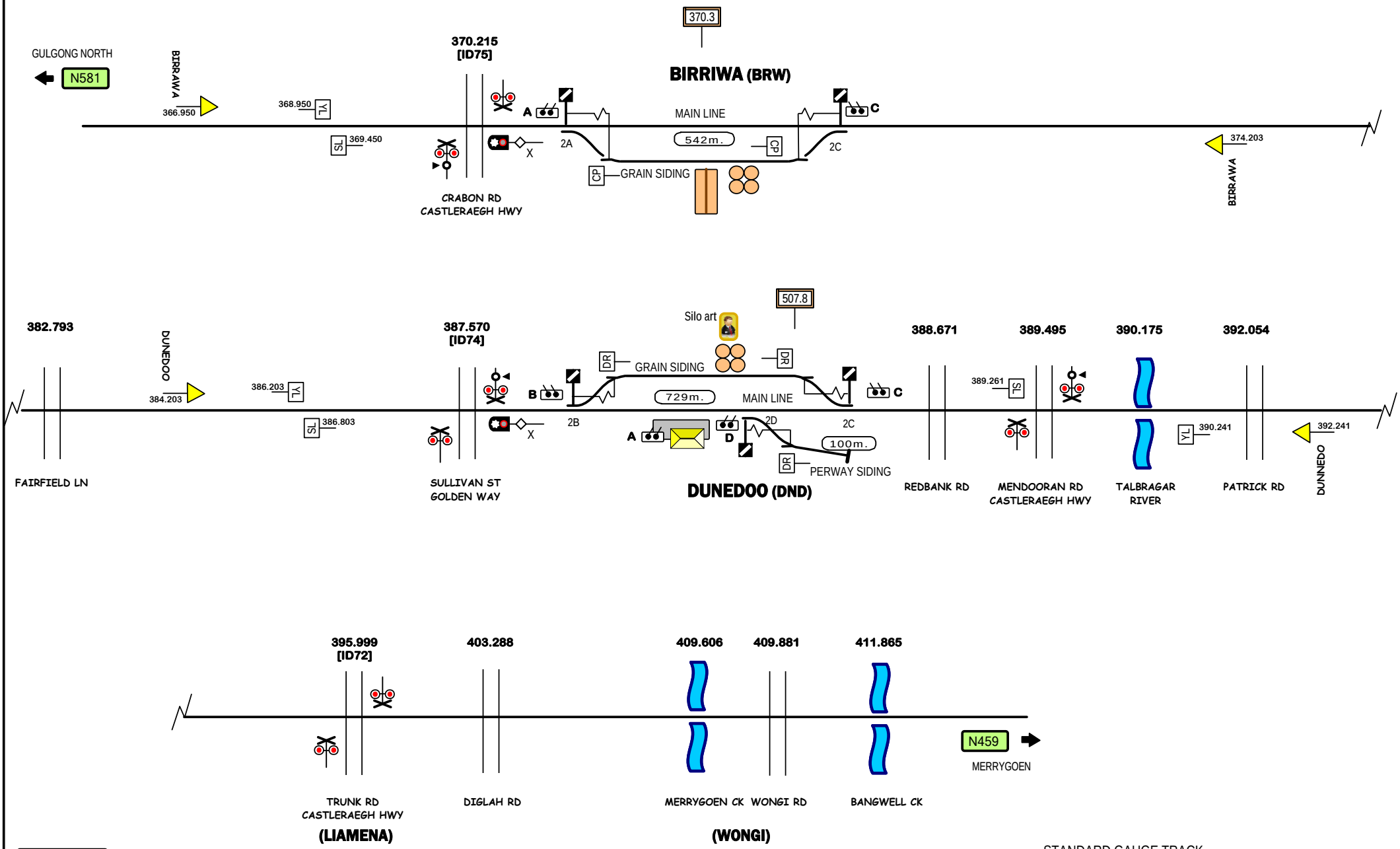

Signal Locations

Home | Support

© 2007 G F Vincent

STANDARD GAUGE TRACK

BIRRIWA - (WONGI)

N582